SNAP-CLAD - OTHER DETAILS

PANEL OVERLAP DETAIL

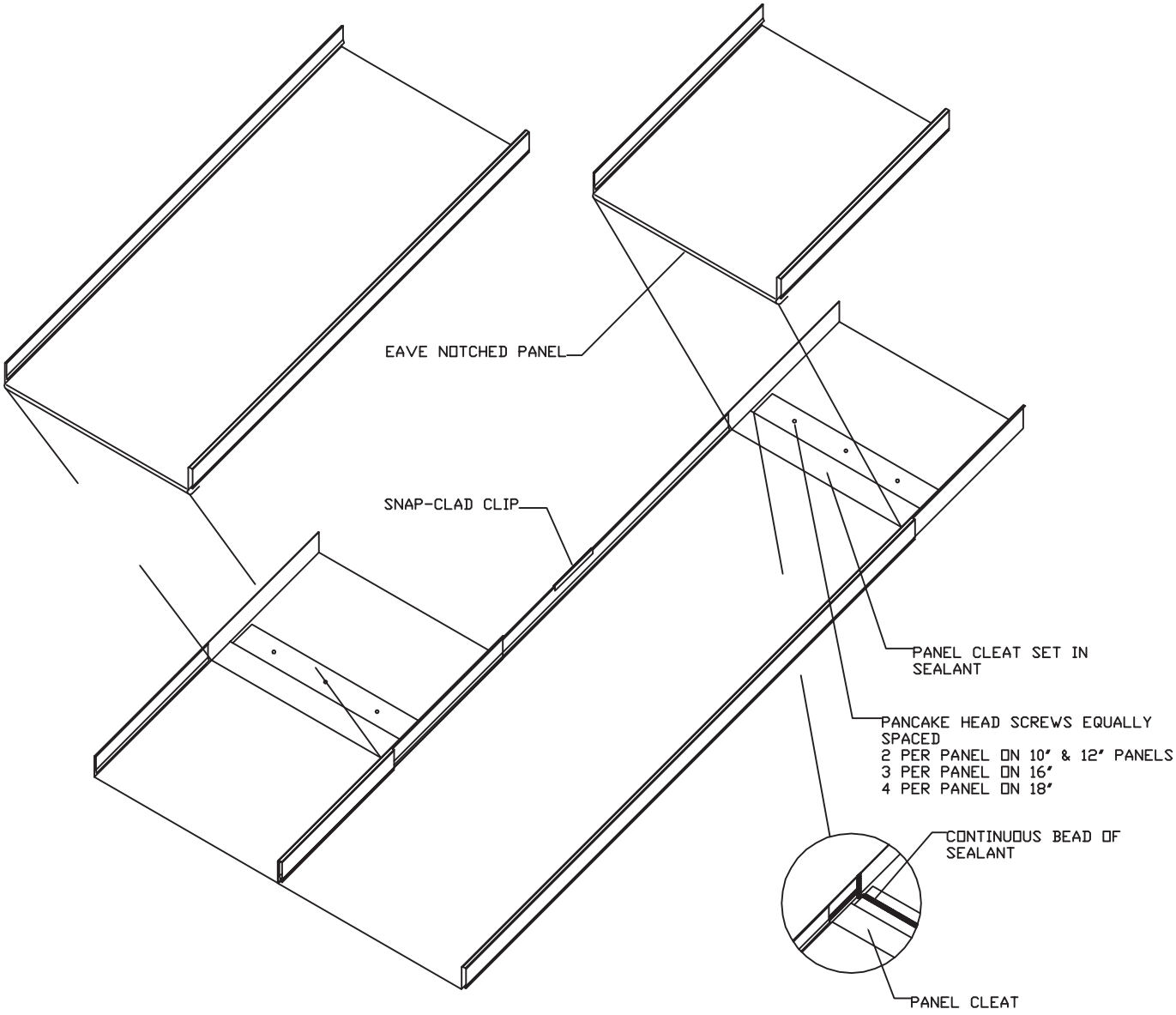

JOB NAME	NOTES
DATE	
CONTRACTOR	

PAC-CLAD PETERSEN

800-PAC-CLAD | PAC-CLAD.COM

HQ: 1005 Tonne Road
Elk Grove Village, IL 60007
P: 800-PAC-CLAD
F: 800-722-7150

9060 Junction Drive
Annapolis Junction, MD 20701
P: 800-344-1400
F: 301-953-7627

10551 PAC Road
Tyler, TX 75707
P: 800-441-8661
F: 903-581-8592

102 Northpoint Parkway
Acworth, GA 30102
P: 800-272-4482
F: 770-420-2533

1800 S. 7th Ave., Suite 130
Phoenix, AZ 85007
P: 833-750-1935
F: 602-254-6504

1885 Station Parkway NW, Suite B
Andover, MN 55304
P: 877-571-2025
F: 866-901-2935